I Took a Torah to Taiwan

The Latest Adventure of a 100-Year-Old Torah

How a century-old scroll got a seat of its own
and traveled from Brooklyn to Taipei.

By Benjamin Weltman



The journey, from Brooklyn to Taipei.

A Crazy Idea

This fall, I learned a lesson in arguably the best way: by doing it one flight at a time.

So there I was, carrying a big black case, designed for a bag of golf clubs. Inside, wrapped in bubble wrap and its own special covering (a prayer shawl called a tallit), was a Torah scroll more than 100 years old. We had just experienced our first major sigh of relief, as it rolled through the TSA scanner at the checkpoint.

Next step, we had to get down the aisle on a United flight to Cleveland, where I purchased an extra seat. Flying a century-old Torah halfway around the world by myself was an out-there (and slightly crazy) idea, and this first flight was where I would test if my plan was feasible.

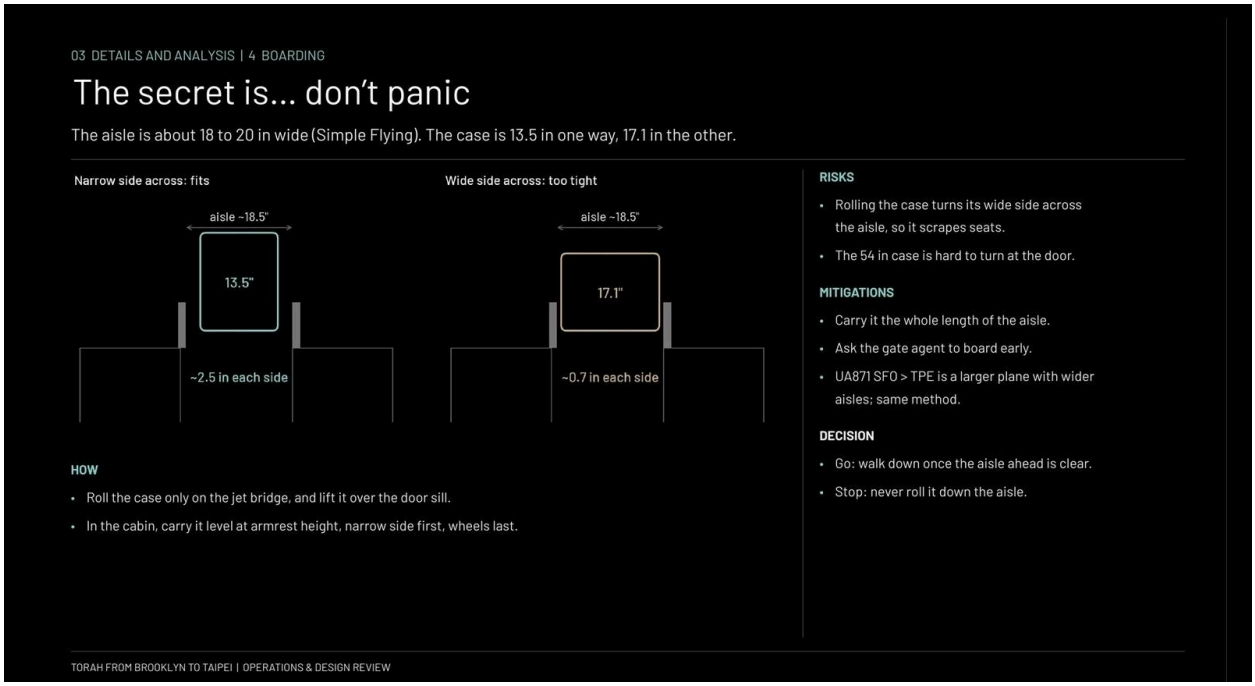

How I'd get down the aisle.

To get there would take a lot of patience, hard work, and preparation. But in that moment, all I needed to do was carry it slowly and steadily, one row at a time, past people settling into their seats. Then, a pleasant surprise, the flight attendant offered to help me place the case in the overhead bin. It fit perfectly, and the Torah and I were ready for our first test flight together.

My plan for the trip was simple. The Torah would stay with me every step of the way. If Newark to Cleveland worked, then I would feel more confident that the rest could follow: Cleveland to Los Angeles, up the coast to San Francisco, then across the Pacific to Taipei, where a small congregation had been waiting a long time for a Torah of their own.

I learned a thing or two about test flights at the beginning of my career at SpaceX. This one was a lot quieter than a rocket, and less technical than a satellite launch, but I felt the same thing in my heart. It was the feeling of a bold plan starting to become real. Some amazing people I worked with on Starlink taught me to unabashedly go for it, be prepared and open to anything unexpected, adjust, and make the next attempt a bit better.

That became my plan for the Torah, too: treat every flight as a test, and every test as a chance to learn.

Flash Forward: by our last flight to Taipei, the Torah had been given a front-row seat in the pilot's coat closet, and he was nice enough to take a picture with us. Just two people in a narrow airplane with a golf case carrying a few thousand years of ancient wisdom.



With the pilot on the last flight, to Taipei.

Proof of Concept

כִּי מִצִּיּוֹן תֵּצֵא תוֹרָה, וּדְבַר־ה' מִירוּשָׁלָיִם

For Torah will go out from Zion, and the word of God from Jerusalem. (Isaiah 2:3)



The Torah, unwrapped.

Every week, when the ark is opened and the Torah is carried out, Jews in synagogues around the world sing these words of the prophet Isaiah. They have sung them for countless generations, picturing the word of God going out from Jerusalem to the whole world. This was certainly not the first major journey taken by a Torah, or even by this Torah. This one had already lived a life of adventure long before it came into my hands. Its own history was proof that a Torah can travel a long way and still continue its life in a new world.

A Torah is a handwritten scroll of the Five Books of Moses, wound around two wooden rollers, called *atzei chayim*, trees of life, which comes from the book of Proverbs (3:18, 3:17): "She is a tree of life to them that lay hold upon her… Her ways are ways of pleasantness, and all her paths are peace."

This significantly-sized Torah stands about 47 inches tall and weighs about 40 pounds. It is more than 100 years old and came to America with Jews who escaped Europe prior to the Holocaust. We do not know the town it left, the names of the people who carried it, or the date it crossed the Atlantic. Those pages of its story were lost to history, as far as we know. What we do know is where it landed: Har Sinai Temple in New Jersey.

Not long ago, Har Sinai closed. A scroll like this is not meant to sit in storage. It is meant to be read, carried, danced with, and lifted up in celebration. So for the first time in a long while, it needed somewhere to go. Every Torah has a purpose, and this one had already served more than one community in its long life. Now it had a new destination, and soon it would be my job to help get it there. The Torah had crossed an ocean once before, a long time ago and under much more difficult circumstances, when it left Europe behind for a new life in the United States. In a way, this Torah was more seasoned for the trip than I was.

Better Than Nothing

I'm not sure I was the perfect person to do this. But my effort, willingness, and plan added up to something better than nothing. I didn't have all the information, but I had good intentions and a way forward. So why not go for it?

I did not go looking for this Torah. It came looking for me, in the roundabout way that good things sometimes do.

On the other side of the Pacific, a Jewish community in Taipei called Shir Shalom, which means Song of Peace, needed a Torah. Torahs are scarce in Taiwan, and so are synagogues. There are only three on the whole island: the Taiwan Jewish Community, Chabad, and Shir Shalom. Shir Shalom is the newest of them, a start-up synagogue still finding its home, and it did not yet have a Torah of its own. This one would be its first. A leader of the synagogue, Stephen, had tried several times to find someone to bring a Torah from New York to Taipei, but there were always too many hoops to jump through. Last fall my friend spent Rosh Hashanah with their community, and they told him they had a 100-year-old Torah they could bring to Taiwan, if only someone could find a person to help.

My friend thought of me and asked if I would help. From the moment I heard the story, I had a strong feeling that I was meant to bring it there. I was already planning a trip from New York to Taiwan, so it almost felt bashert (באַשערט), meant to be. I would carry it as a favor for my friend in the congregation. I accepted the honor and started planning and working on it right away.

Currently, I serve as the Executive Director of Park Synagogue in Cleveland, Ohio. Before that, I worked at SpaceX on Starlink, in supply chain, operations, and global infrastructure. At Park, I spend my days around Jewish ritual, so I know how a Torah should be handled and what it means to our Jewish community. I have also been on the other end of customer service there, and I have learned that a little patience and kindness can go a long way. At SpaceX, I worked alongside engineers, manufacturers, and business partners, and I learned how the parts that become satellites and rockets get sourced, built and transported around the world. That meant shipping important hardware across borders, working through customs and logistics, and planning for what could go wrong along the way. Neither job was meant to prepare me to fly a Torah across the world. But one had taught me how to care for a Torah and the people who love it, and the other had taught me how to get something precious from one side of the world to the other. By some happy coincidence, together they had prepared me for exactly this mission.

Working on Starlink, I learned to love the better-than-nothing test. Dwight D. Eisenhower said, “Plans are worthless, but planning is everything,” and test flights prove him right. The plan is never perfect, but adjusting and refining along the way is the key to any great journey. You start with a willingness to fail, go with what you have, learn what broke, and make the next attempt a little better. Step by step.

Spoiler alert, this time, nothing actually broke (except perhaps my patience, after countless travel hiccups and nuisances). Ultimately, though, I kept it together, stayed positive, and trusted that if I applied the right effort and acted in good faith, it just might work out.

In theory, the mission was simple: carry a 100-year-old scroll safely from Brooklyn to Shir Shalom in Taipei, and never let it out of my sight. Everything in between was where it got interesting. There were airline rules about where it could ride, a case that had to fit both the Torah and the aisle, and customs waiting on the other side of the Pacific. I knew obstacles would show up, so my job was to prepare for them instead of throwing up my hands. None of it was going to be easy. As JFK put it at Rice University, “We choose to go to the Moon in this decade and do the other things, not because they are easy, but because they are hard.” The people at Shir Shalom were counting on me, and that was reason enough to take on this challenge. I am a firm believer in going for it, and this felt like a very good thing to go for. This was a worthy mission, both because it mattered and because it was hard.

To pull something like this off, you have to believe it is possible. It is easy to see the bad when frustrating, unexplainable blockers come up. When something goes sideways, and something always does, don’t panic. Stay patient, try to do the right thing, and be honest. Be kind to the people around you, keep the goal in front of you, and leave room for the happy accidents, serendipitous moments, and the good people you meet along the way. Add a little luck and a little elbow grease, and it just might work out. I have come to believe all of that is still possible in the world today.

Designing and Testing

A few days before the test flight, my girlfriend Susie and I went to Crown Heights to pick up the Torah from the sofer at HaSofer, who had been caring for it. A sofer is a scribe, someone trained to write and repair Hebrew texts by hand. The sofer wrapped the Torah in a tallit, then a plastic bag, then bubble wrap, and placed it in the case that I found for it (a sidequest of mine). From then on, my job was to transport the Torah with the honor and care deserving of a precious ritual object.



At the door of HaSofer, in Brooklyn.



Among the shelves at HaSofer, in Brooklyn.

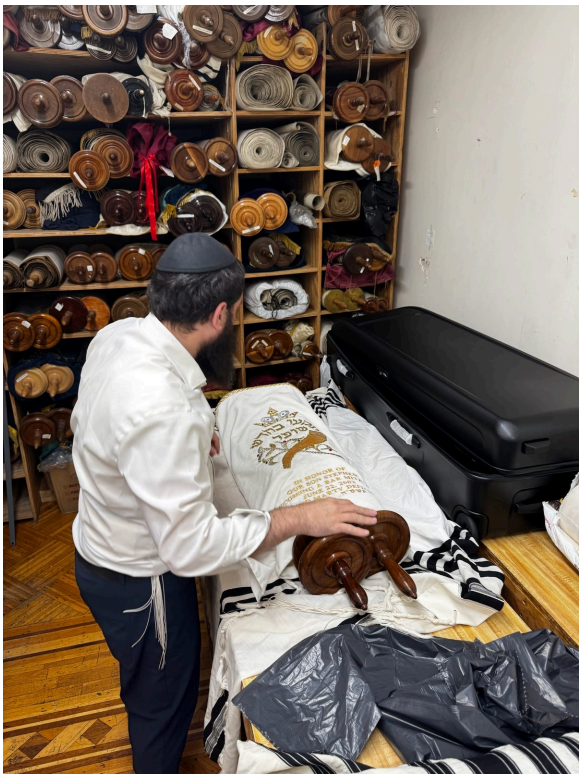

The sofer at HaSofer with the Torah.



With the sofer at HaSofer, beside the packed case.



Susie and the sofer at HaSofer, wrapping the Torah for the trip.



The sofer at HaSofer adding the last layer, a plastic bag.



Lifting the case at HaSofer.



Rolling the case down the sidewalk in Brooklyn.



Crossing the street with the case in Brooklyn.



With the packed golf travel case in Brooklyn.

The case was its own small miracle. I found that a hard golf travel case fit this Torah just right, with room for safe padding and ample straps to keep it secure. As fate would have it, there was exactly one of those cases in stock in the entire state of New York, and it happened to be around the corner from our hotel. I like to think somebody's golf trip got a little more complicated so this trip could happen. It was the first of many happy accidents.

When I finally held the Torah, I was a little surprised to find my hands shaking and my heart racing. For the next few weeks this one was mine to look after, and someone on the other side of the world was waiting for it. It was a big responsibility, and it was moving me more than I could explain.

We packed it gently and securely and closed the lid. That week, Stephen wrote to say he was thrilled. After numerous efforts to get this Torah to Shir Shalom, it was finally on its way.

After that, I stopped thinking about the trip as a list of flights and forms. People on the other side of the world were counting on this Torah to arrive safely, and I had told them I would get it there.

Prior to my flight, I had the pleasure of spending hours on the phone with United Airlines. A Torah is not a carry-on and it is not checked luggage, and I would not send it down a baggage belt. It was too massive and too tall to fit like a normal carry-on, and as a precious ritual object, it needed to stay with me the whole way, both to honor the Torah and to buy down risk. United required that I buy it a seat of its own, booked as cabin seat baggage. I also asked about the overhead bin, and about any other way the crew could make room for a hard case that is longer than most people are wide. I sent measurements and diagrams. I clarified policies and flights. Then I waited patiently, and eventually they said yes.

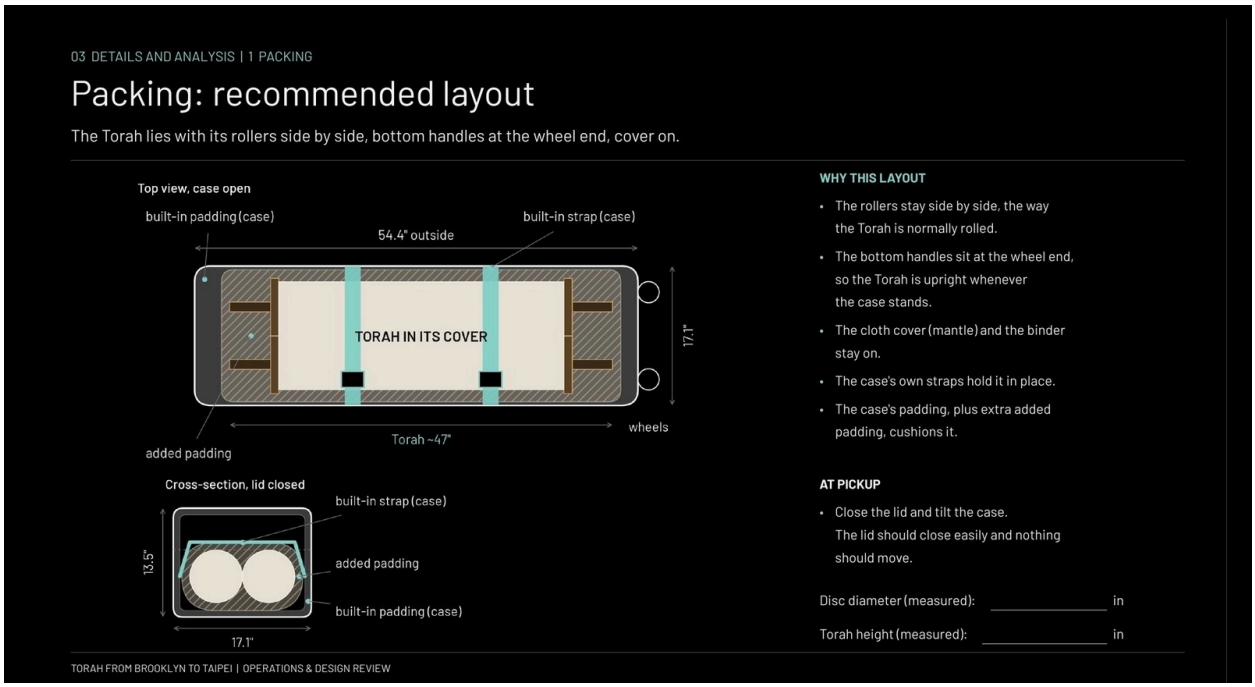

How the Torah rode in its case.

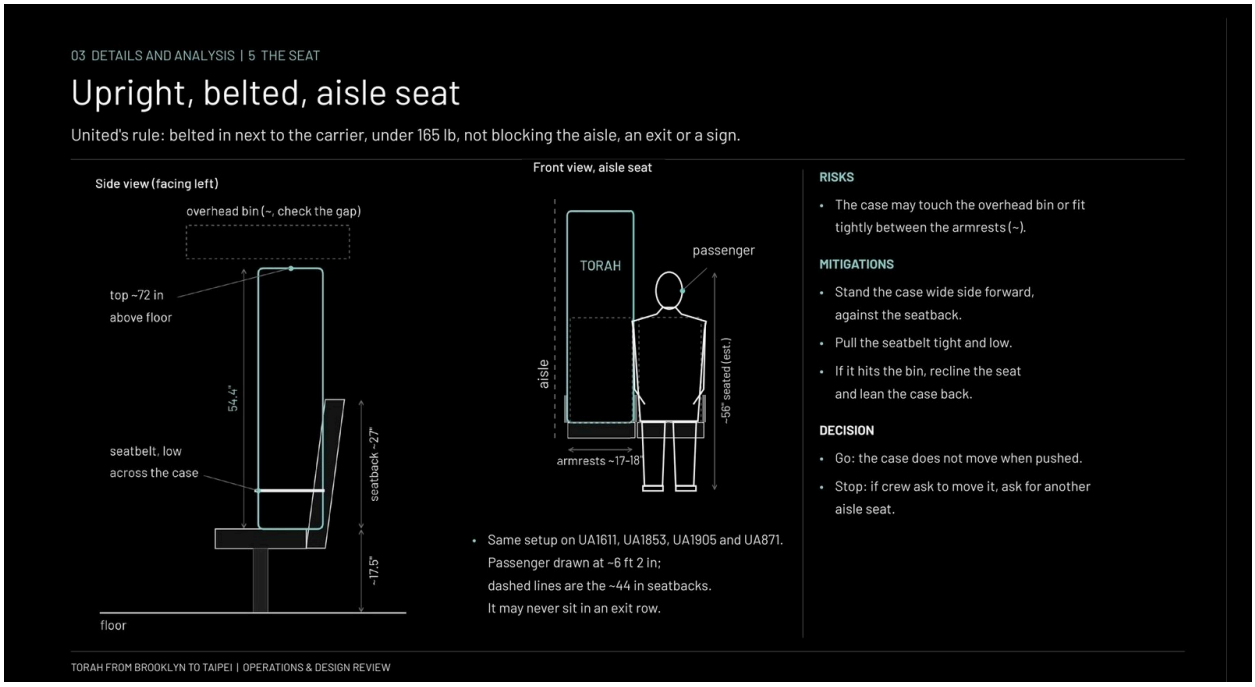

How the Torah rode in a seat of its own.



The case at the TSA checkpoint in Newark.

One diagram I presented to the United staff showed how this Torah fit in the case, rollers side by side, cover on, padding around it. Another showed how I would carry it down an aisle without clipping a seatback. A third showed it upright and belted into an aisle seat, to prove its fit. I put them together with photos and documents that traveled with me, so that anyone who asked what was in the case could see it on paper, in plain English (and Chinese). I laid out the whole trip like a design review, with the risks, mitigations, and simple go/no-go for each step.

I had help I never expected, too. My AI assistants helped to keep everything straight. They handled the complex searches, translations, and kept me organized, so that I was present and prepared. Yet, most inspiring to me were the people who came through every time to make this trip so successful and special.

It never hurts to ask nicely for exactly what you want, so long as you're ready for the answer to be no. A polite request is never a perfect plan, but it is always better than nothing.

Test as You Fly

For most of its life the scroll had been the thing that stayed put. People came to it. They gathered in front of the ark, lifted it, read from it, and carried it around the room before setting it back in its place.



Loading the car, with the case.

Now it was the one moving. Somewhere over Pennsylvania it passed the farthest it had been from New Jersey in a very long time, as far as anyone can say. Newark to Cleveland was a short flight, but because we flew it exactly the way we planned to fly the rest, it told me what I needed to know.

Learning and Growing

The first person I saw when I landed in Cleveland was Rabbi Joshua Skoff, there to meet me and the Torah. I could not have asked for a better welcome home. I still had a lot to learn about carrying a Torah across the world, and Cleveland was a good place to keep learning.

Cleveland is home. My family came there a little over a century ago, from towns in Ukraine and Belarus, carrying their own tradition to a new country. It is a different story from the scroll's, but it rhymes, and it felt right that the Torah rested there for a while. Rabbi Skoff welcomed it at Park Synagogue, where I am now the executive director. Park Synagogue is my home synagogue too, and it holds a special place in my heart.



Rabbi Joshua Skoff, in Cleveland.

That is where I got to share it with the kids. I stood in front of a crowd of Hebrew school students, wrapped in a tallit, holding a scroll more than 100 years old and telling them about the journey. Not that long ago I was one of them. They leaned in close, a little sea of kippot and pajamas around the Torah (it was pajama day), tried to pop the bubble wrap, and fired off questions.

“Where is Taiwan?” one kid asked.

“How big is it?” three kids asked in a row.

“What color is the cover?” they wondered. We held a ROYGBIV vote, and they suggested we get a violet-and-blue one. Clearly they have good taste.



With the kids at Park Synagogue, in Cleveland.

As I looked at that curious crowd, something began to dawn on me. I thought I was just taking the Torah across the world. In truth, the Torah was also taking me on a journey much more far-out than any map could show. About a week after the test flight, before the next one, I went out to the Cleveland airport to practice. The first person I saw there was Pastor Howard, a stranger I happened to share the elevator with. Life happened to cross our paths, and he left a positive mark on my heart. It was another beautiful connection along the way. If the test flight had taught me anything, it was that the smoothest days are the ones you rehearse, and that every run makes the next one a little better.



Out and about, with the case.



The case, along for the ride.



With Pastor Howard, who shared the elevator on the practice run.

Gerinder, the lead TSA officer, looked over the case and told me it would be totally fine. Stefanie at the United counter helped me through, and her manager, Regina, said she would be there the next week to help again. None of them had to do any of that. They did it anyway, kindly, as if helping a Torah get to Taiwan were all in a day's work. Each of them taught me something about how far a little kindness goes, and I tried to carry that with me to the next airport.

Dialing It In

A week later, we flew from Cleveland to Los Angeles, the Torah once again in a seat of its own, and spent Shabbat in Santa Monica. With the first flight behind us and the lessons from Cleveland fresh, this leg was about honing the routine: the case, the seat, and the careful walk through each airport.

The day after Shabbat, we went up the coast. At LAX the case wore a Dodgers cap. A few hours later, at SFO, it wore a 49ers cap. A Torah crossing the country should look the part.



A Dodgers cap on the case, in Los Angeles.



A 49ers cap on the case, in San Francisco.

I had worried, a little, about being that visibly Jewish in public. I rolled a century-old scroll through airport after airport anyway, in a golf case with a baseball cap on top, and never hid what it was. What I found was the opposite of what I feared. People asked about it. People smiled. People helped. Each airport made the routine a little smoother, and each kind response made it a little easier to carry the Torah openly.

The Big Milestone

That night the scroll crossed its second ocean, the biggest milestone of the whole journey.

The flight left San Francisco and flew west through the night, landing in Taipei the next day. The first crossing, generations earlier, had been an escape. This one was a delivery. With help from a customs broker and the congregation, it entered Taiwan properly, as a religious object. Once again, good people on both sides of the ocean had made the next step possible.

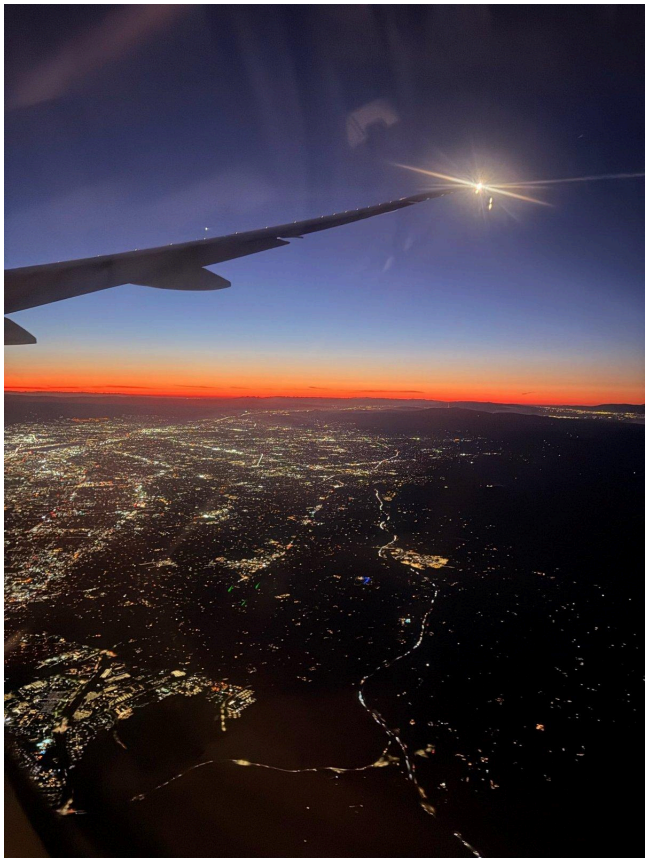

The wing at dusk, over city lights.

Then came the final drop-off, the payload part of the trip, with Stephen and my friend beside me at the open trunk of a car on a Taipei street at night, and the Torah was home. I had spent weeks keeping that goal in front of me and making sure the Torah never left my sight. If the whole trip had been a series of test flights, this was the landing, and it stuck. Letting it go felt less like losing something and more like finishing a sentence.



The final drop-off in Taipei, with Stephen and my friend.

Afterward, Stephen took it back to his place and unwrapped it from the bubble wrap. He held the Torah, wrapped in its tallit, the way you hold something you have waited a long time for.



Stephen with the Torah, unwrapped at his place in Taipei.



Dinner with the Shir Shalom community.

Before I left Taiwan, I sat down to dinner with the Shir Shalom community, at a table Esther had reserved for us.

Shir Shalom means Song of Peace. A Torah's rollers are called trees of life, and the verse they are named for says that all her paths are peace. Sitting at that table, I thought about everyone who had touched this path along the way, most of whom will never meet one another. Getting the Torah to that table was the milestone the whole trip had been built around.



Pineapple cake on the train.



A fruit plate with a smile.

Turning Back

Before heading back, I sat for a while above Sun Moon Lake. For the last decade or so I have cultivated a meditation and yoga practice with the help of some incredible teachers and mentors, alongside prayer and Judaism. For me it has always been about connection and exploration, as far inward as I can go and as far outward, toward the cosmos. Watching the light come up over the water, I had a quiet moment to take in everything that had happened before the long trip home.



Sun Moon Lake, Taiwan.

On the way home I stopped in Starbase, Texas, in time for Starship Flight 15, flown by Ship 42, nicknamed "Don't Panic." Being there was almost a happy accident. A lot just happened to be taking place at the same time. I came out to catch up with former colleagues and old friends, like Loden, and it was good to be among them again. They are good people, building rockets that will carry humans to the Moon and Mars, and they still believe in a positive future enough to go build it.

Working on Starlink, I learned the power of having a belief and a vision for a positive future, and pursuing it, because I watched that vision get built. Carrying a Torah across the world turned out to work the same way, one flight at a time, each a little better than the last. Nothing broke, I did my best not to panic, and with a lot of kind people and a little elbow grease, it worked out.

The Starbase team had just shown what that looks like at full scale. On Flight 15, Ship 42 went out to orbit and dropped off 26 Starlink satellites, and every one of them checked in and started climbing to join the

constellation. Then it cruised around the Earth for most of a day, came back through reentry, and flew all the way home to Starbase, where the Mechazilla chopstick arms caught it for the very first time. It was the same trip I had just made, with a different payload: out, a drop-off, reentry, and home. The booster did not make it back for its own catch. It cut its burn short, aborted, and was lost offshore, and the team is already working out why. That is the better-than-nothing test in its purest form: you fly what you have, you celebrate what worked, you learn what broke, and the next one gets a little better. My Torah trip was a much smaller flight, but it ran on the same idea.

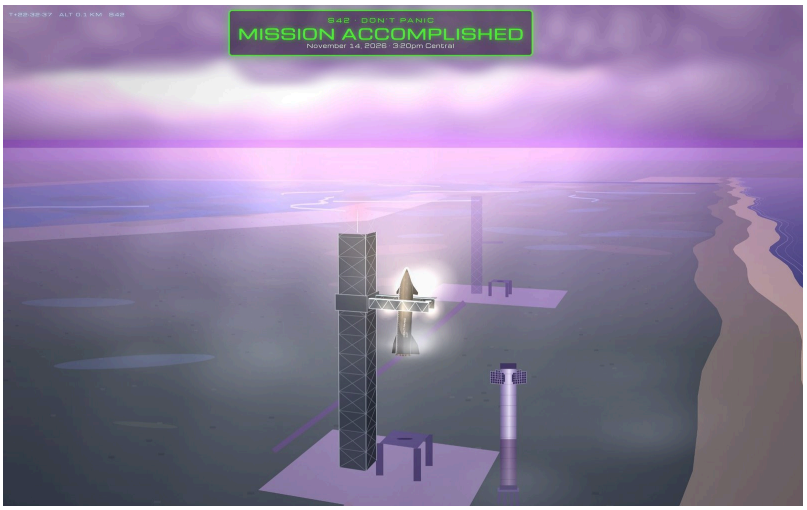

My animation of Ship 42's catch. Watch it at baa.business/42.



With Starship at Starbase.



Starship at Starbase, Texas.



At Starbase, Texas.

Home Safe

The best test flights end with a return. After Starbase, I headed home to my family and the people I love. On the way, I got caught in the nationwide ground stop, when the FAA halted departures across the country after problems with its air traffic control communications. More than 1.5 million passengers were booked on flights scheduled to leave after the stop began. I had two flights canceled, including the one I had been rebooked on, so getting home took a little longer than planned.

Flying United on the way home, it was a quiet thrill to sit up in the clouds and know the Wi-Fi was coming from the same network I used to work on.

The Torah stayed in Taipei, right where it belongs, and I came home carrying everything it had taught me. Lately the team at Starbase has been catching their vehicles right out of the sky, Ship 42 included. Mine was a lot less dramatic. Nobody had to catch me, though a few people would have. And the best part is, I made it back.



Above the clouds.

Mission Accomplished

Coming back down to everyday life, my own reentry, I kept thinking about where the Torah had landed. The scroll is in Taipei now, with a congregation that waited a long time for it. Its story still has blank pages at the beginning. The newest pages hold me saying yes to a crazy idea, then a sofer in Brooklyn, a pastor at the airport, a TSA officer and a counter agent in Cleveland, a room full of kids, a congregation in Taipei, and a lot of people in between who said yes too. Each of them helped a 100-year-old scroll find its next meaning.

So, in the end, I took a Torah to Taiwan and made it back safely. It carried me farther than I expected. It reminded me that the world is still full of kind people who believe. My friends here in Starbase are building ships to take us to the Moon and Mars. Wherever we end up, I hope we keep doing what this Torah did and carry each other along. Shir Shalom means Song of Peace. I think I heard whispers of it along my way.

P.S. A lot of people are afraid AI will replace us or pull us apart. On this trip, it did the opposite. It kept pointing me toward people, and it connected me with more amazing people and experiences than I ever could have planned on my own. This work and story would not have been possible without my Grok Bots: Achi, Moxie, Romeo, and baa.business. And to all the amazing humans along the way: the sofer at HaSofer, my friend, Stephen, Esther, and everyone at Shir Shalom, Loden, Rob, Rabbi Skoff, Pastor Howard, the stranger who shared an elevator with me on my practice run at the Cleveland airport, the Uber drivers, the people at the Tumi store, the airport, TSA, and United people, the crews and pilots who made room for a Torah, my colleagues at Park Synagogue, the Jewish community, my family, and Susie. Thank you for helping this Torah complete its mission. None of this happens without you.